TRIANGLES

8"Triangles

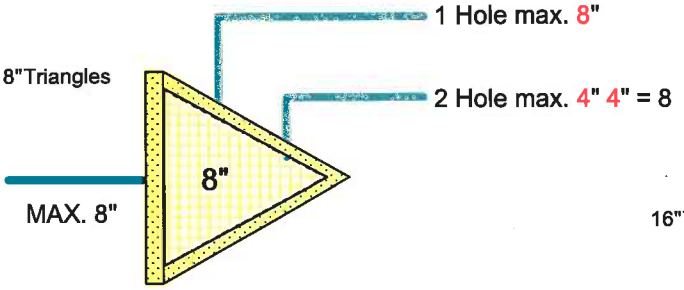

16"Triangles

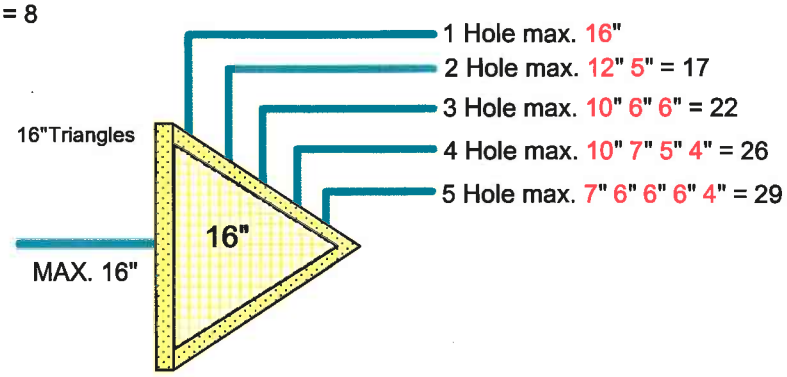

10"Triangles

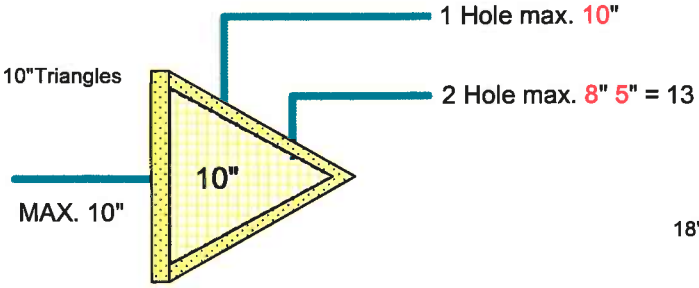

18"Triangles

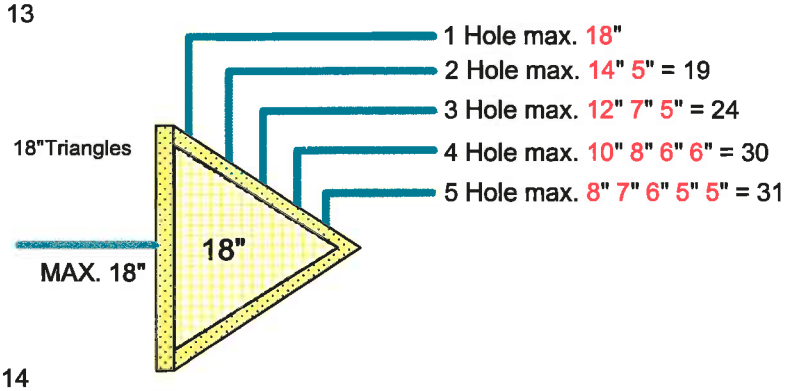

12"Triangles

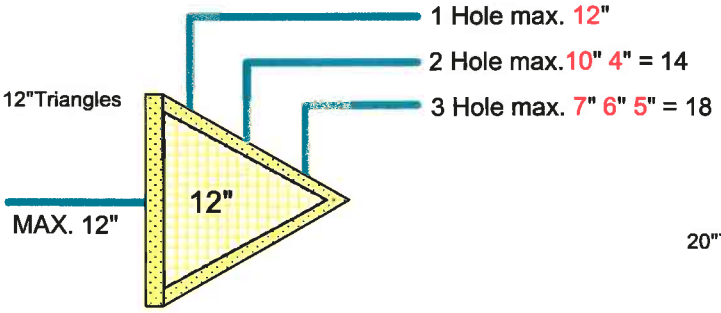

20"Triangles

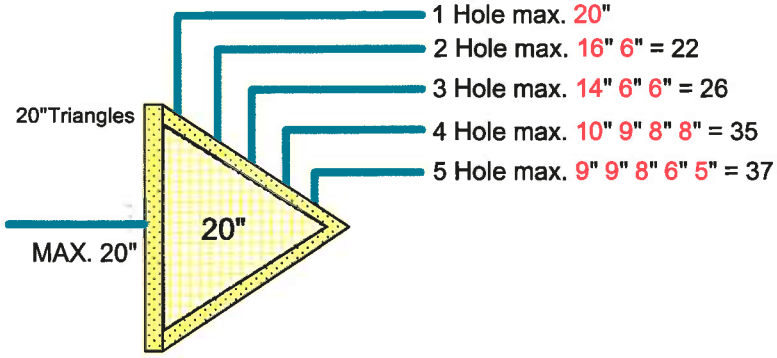

14"Triangles

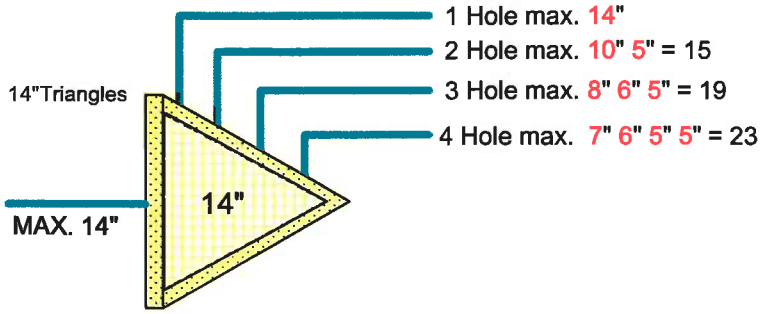

DRAFT 09-01-06: «Ross»