REDUCERS

10-Reducer

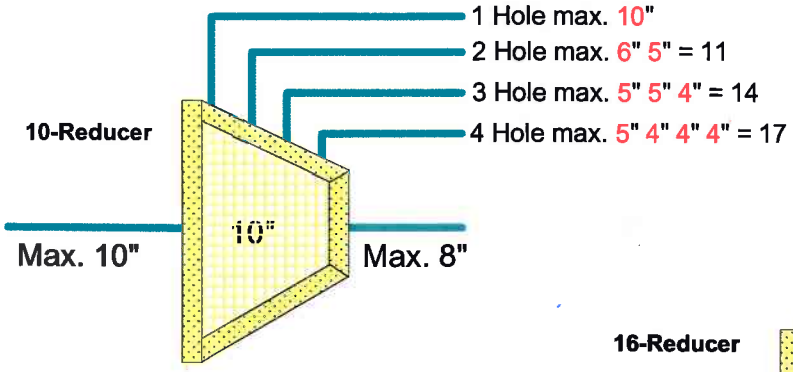

16-Reducer

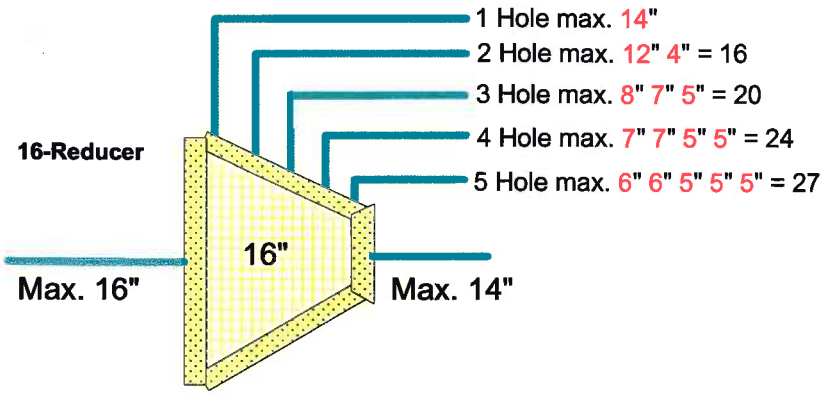

12-Reducer

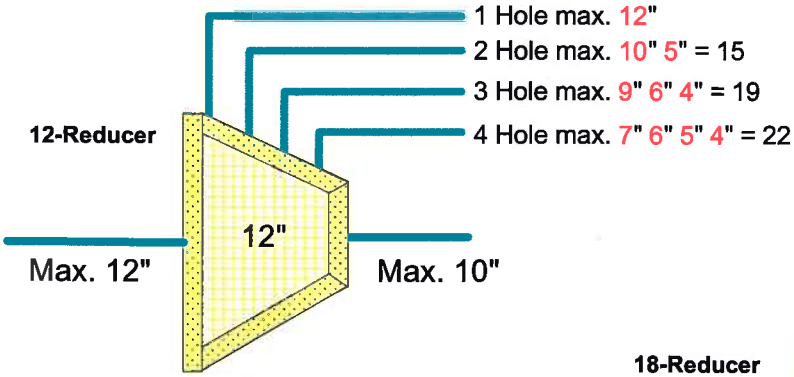

18-Reducer

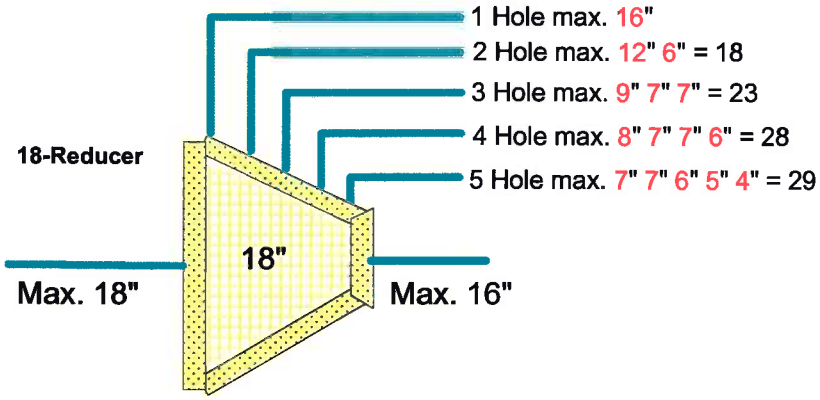
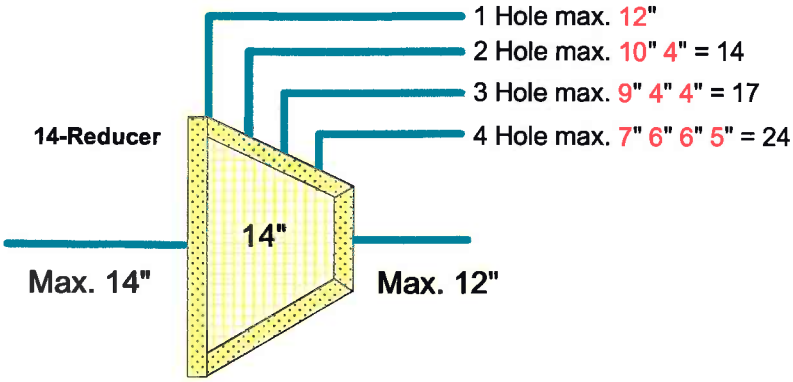
14-Reducer